45–48	6
30–44	1
DOOR OPNG.	T

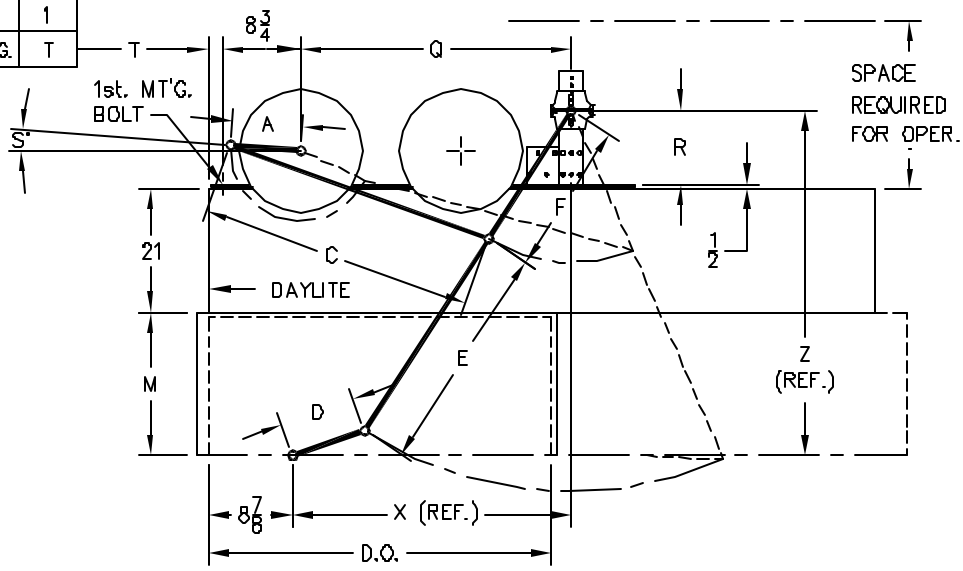

MOVFR MOCT MOD	15
MOM–MOH MOMCT MOHCT	19

48	8 13/16	34 5/16	12	38	21	23	39 5/8	55 7/8	33 3/4	11 3/8	5°
47	8 5/8	34 1/8	12	38	21	23	39 5/8	55 7/8	33 3/4	11 3/8	5°
46	8 7/16	33 15/16	12	38	21	23	39 5/8	55 7/8	33 3/4	11 3/8	5°
45	8 1/4	33 3/4	12	38	21	23	39 5/8	55 7/8	33 3/4	11 3/8	5°
44	8 7/8	36	10	30	21	19	34 5/8	47 7/8	33 3/4	7 3/8	12°
43	8 3/4	35 7/8	10	30	21	19	34 5/8	47 7/8	33 3/4	7 3/8	12°
42	8 5/8	35 3/4	10	30	21	19	34 5/8	47 7/8	33 3/4	7 3/8	12°
41	8 1/2	35 5/8	10	30	21	19	34 5/8	47 7/8	33 3/4	7 3/8	12°
40	8 3/8	35 1/2	10	30	21	19	34 5/8	47 7/8	33 3/4	7 3/8	12°
39	7 5/8	30 1/8	8	29	18	15	29 1/4	44 1/2	28 3/8	8	10°
38	7 1/4	30	8	29	18	15	29 1/4	44 1/2	28 3/8	8	10°
37	7 1/8	29 7/8	8	29	18	15	29 1/4	44 1/2	28 3/8	8	10°
36	7	29 5/8	8	29	18	15	29 1/4	44 1/2	28 3/8	8	10°
35	6 7/8	29 1/2	8	29	18	15	29 1/4	44 1/2	28 3/8	8	10°
34	5 1/2	25 3/8	6	32	15	15	25 1/4	44 3/4	24 3/8	8 1/4	5°
33	5 3/8	25 1/4	6	32	15	15	25 1/4	44 3/4	24 3/8	8 1/4	5°
32	5 1/4	25 1/8	6	32	15	15	25 1/4	44 3/4	24 3/8	8 1/4	5°
31	5 1/8	24 3/8	6	32	15	15	24 3/8	45 1/8	23 1/2	8 5/8	5°
30	4 7/8	24 1/4	6	32	15	15	24 3/8	45 1/8	23 1/2	8 5/8	5°
INCHES	A	C	D	E	F	M	X	Z	Q	R	S
DOOR OPENING	OPERATOR ARMS		DOOR ARMS			CLUTCH	PIVOT		OPERATOR		

	SINGLE SPEED & TWO SPEED OPERATOR DATA TABLE 30–48 D.O. FOR HIGH CABS 21" HEADER	FEB. 23 1987 S6898–21